SRWF-1E86
User manual

Tel:+86-021-50275250/50275255Fax:+86-021-50270187 http://en.51sunray.com/
Add: 7-8F, No 560 Shengxia Rd, PudongZhangjiang, Shanghai, 201203, China

Contend

1. Module introduction

SRWF-1E86 is low power wireless data transceiver modules. It can be used for any standard or nonstandard user protocol.

The below are SRWF-1E86 main features:

1. Adjustable transmitting power:
   Eight grade of transmitting power can be available: 1dBm, 2dBm, 5dBm, 8dBm, 11dBm, 14dBm, 17dBm, 20dBm. Default value is 20dBm.
2. Customized work frequency
   433/470/868/915MHz for your choice
3. High anti-interference and low BER(Bite Error Rate)
   Based on GFSK modulation, the high- efficiency forward error correction channel encoding technology is used to enhance data's resistance to both burst interference and random interference
4. Multi-Channel available
   Channel can be configured by both hardware and software. The default is by hardware
   You can configure eight channels by hardware or 32 channels by software which meet the multiple communication combination modes.
5. Easy selection of three interface modes
   You can choose one of TTL/RS232/RS485 interfaces by adjusting the related hardware.
6. Baud rate configuration by hardware and software
   Baud rate can be configured by both hardware and software. The default is by hardware
   Baud rate set to below value by hardware:
   1200/2400/4800/9600/19200bps，default is 9600bps。
   Baud rate set to below value by software:
   1200/2400/4800/9600/14400/19200/38400/57600 bps
7. Serial port data format definition
   Serial port data format can be configured by both hardware and software. The default is by hardware; it support eight bite data(8N1,7E1,7O1) and nine bite data(9N1, 8E1,8O1) and the default is 9bite data.
8. Supporting data frame with no length limit
9. High reliability with small size
   Single chip radio frequency integrated circuit and single MCU are used for less peripheral circuit, high reliability and low error bit rate

10. Multiple antennas available for your different demand

2. Application fields

SRWF-1E86 series modules can be used for below applications:
1. AMR-Automatic Meter Reading
2. Remote control in industry
3. Wireless solutions for weighing scale
4. Data collection of production line
5. Automation and control of medical/electronic equipment
6. Data communication in railway, oil well and wharf
7. Wireless smart control of lighting system
8. Wireless alarm and security system
9. Car alarm, tire pressure monitoring and four-wheel orientation
10. Wireless POS and PDA smart terminals
11. LED display screen for lane buoy or temporary station in open field
12. Automated non-stop billing system on freeway
13. Wireless sensor network
14. Bank queuing management system

3. Technical specification

No	Item	Unit	Min	Typical	Max	Remark
1	Work temperature	℃	-40	25	85	
2	Work humidity		10%~90%(relative humidity without condensation)			
3	Power supply	V	+3.6~+6.0			DC
3	Work frequency	Mhz	433/868			Carrier frequency with 433/470/868/915MHz
4	Transmission power	dBm	1	20	20	Adjustable between 1~20 dBm
5	Transmitting current	mA	80	90	110	Positive correlation with transmitting

						power
6	Receiving sensitivity	dBm	-111	-114	-118	
7	Receiving current	mA	30	35	45	
8	Sleep current	uA	6	10	12	
9	Transmitting distance(20dBm)	m	700	800	900	in open area
10	Modulation	GFSK				
11	Channel number	32				
12	Dimension	mm	49.6*28.3*10			

4. Outline and pin definition

The below is the outline of SRWF-1E86

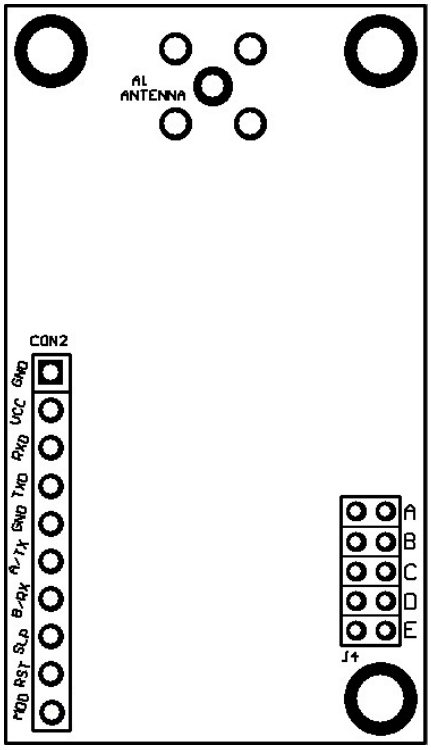

Figure1 SRWF-1E86 outline

Pitch of ten-pin single-row connector in the left is 2.54mm. Pin definition is show in below table:

No.	Signal type	Signal name	Signal direction	Remark
1	Power	GND		Power ground
2	Power	VCC		DC Power, 3.6V~6V
3	Signal	RXD	I	UART Receiving, 3V TTL.
4	Signal	TXD	O	UART transmitting, 3V TTL.
5	Power	GND	I	Power ground
6	Signal	A/TX	I	A of RS485 TX of RS232
7	Signal	B/RX	I	B of RS485 RX of RS232
8	Signal	SLP	I	Low level enable(<0.6V), T >1ms
9	Signal	RST	I	Low level enable(<0.6V), T >10us
10	Signal	MOD		Floating

5. Operation

5.1 Communication interface selection

5.1.1 TTL

TTL interface is showed as below

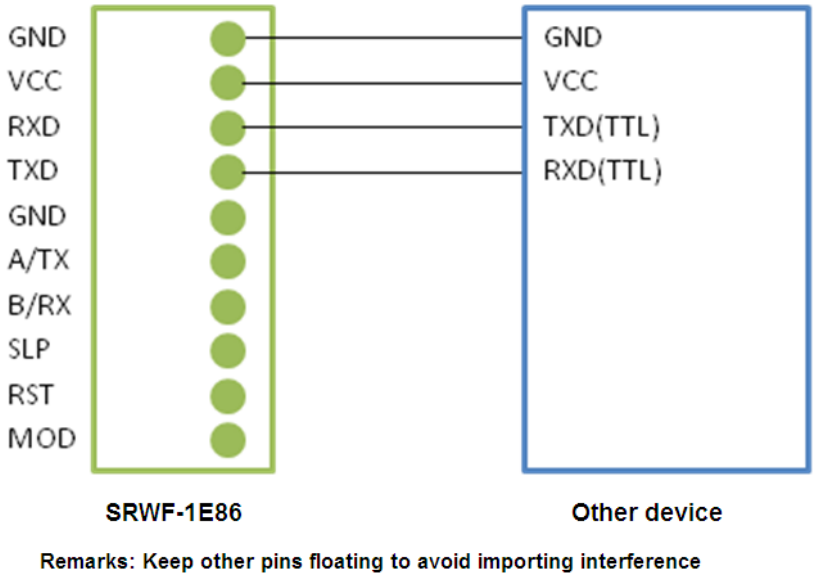

Remarks: Keep other pins floating to avoid importing interference

5.1.2. RS485 interface

RS-485 is showed as below:

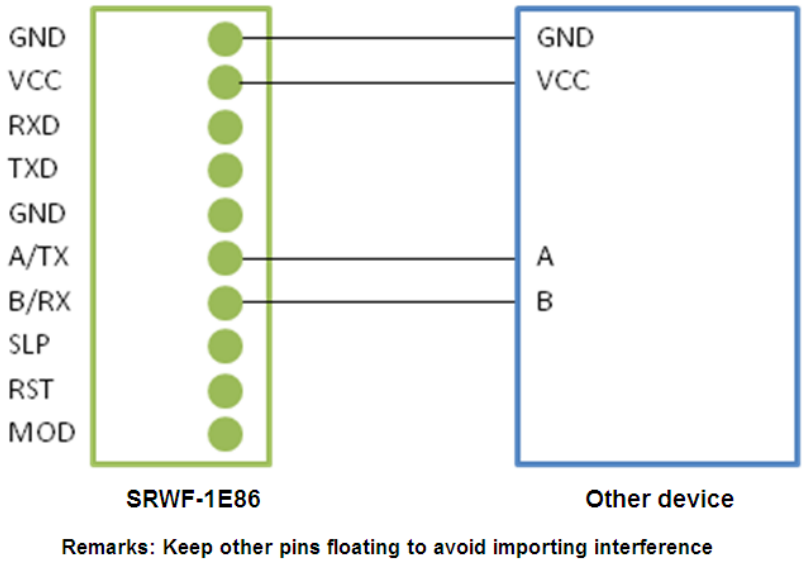

Remarks: Keep other pins floating to avoid importing interference

5.1.3 RS232 interface

RS-232 is showed as below:

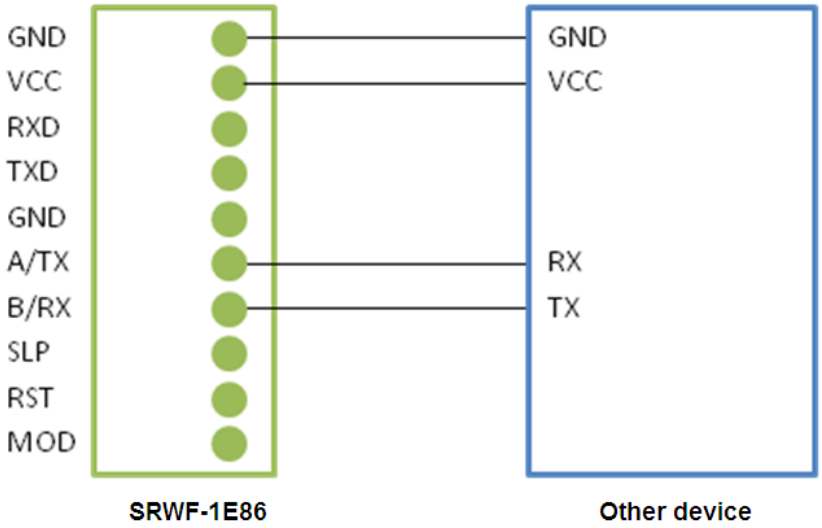

Remarks: Keep other pins floating to avoid importing interference

5.2 Parameter configuration

You can configure the baud rate, data format, channel and transmitting of

SRWF-1E86. Baud rate, data format and channel can be configured by both hardware and software.

5.2.1 Parameter configuration by software

Software parameter configuration: Input the appointed command in serial port to configure. See the appendix one for the list of all commands.

5.2.2. Parameter configuration by hardware (Effective in the state of hardware configuration)

5.2.2.1 Configure channel

ABCD jumper wire of 2.00mm dual row straight pin header is used for configuring channels. You can configure sixteen channels by short connection of ABC jumper like below table before module power-on:

Jumper ABCD	Channel number	433MHz	868 MHz
	0(ABCD no short)	433.521	868.129
	1	434.648	869.256
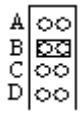	2	435.775	870.383
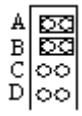	3	436.902	871.510
	4	438.029	872.637
	5	439.156	873.764
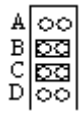	6	440.283	874.891
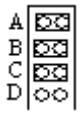	7	441.410	876.018

	8	442.537	877.145
	9	443.664	878.272
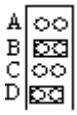	10	444.791	879.399
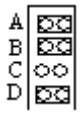	11	445.918	880.526
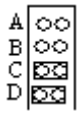	12	447.045	881.653
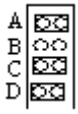	13	448.172	882.78
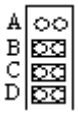	14	449.299	883.907
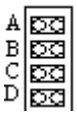	15	450.426	885.034

5.2.2.2 Configure baud rate

Shortcut of pad marked with 12,24,48,96,192 in the area with Baud in SRWF-1E86 board can configure 1200bps, 2400bps, 4800bps, 9600bps, 19200bps baud rate respectively.

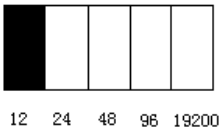	1200bps
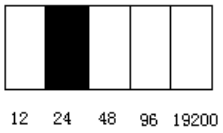	2400bps

	4800bps
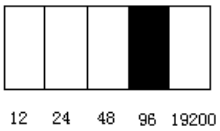	9600bps
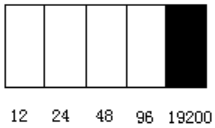	19200bps

5.2.2.3 Configure data format

E jumper of dual row straight pin header is used to configure data format; If E jumper is short, data format is 8 bite, if not, data format is 9 bite

5.3 Indicate light function

When module is power-on, TX, RX light will flash once and module will send its version information to serial port. You can check the basic information of module according to it. For example:

1E86(V11)
C=00(H)(433)
D=024(S),9n1(H)
P=17dBm

Remarks:

1E86 is the part number of SRWF-1E86, (V11) mean the version of module is V1.1.

C stand for channel, 00 is channel number,(H) mean channel selection by hardware is effective, 433 is working frequency

D stand for baud rate, 024 mean that current baud rate is 2400bps,(S) mean baud rate adjustment by software.

9N1 mean that data format is 9bite, (H) mean that data format

adjustment by hardware is effective

P stand for transmitting power, 17 mean that transmitting power is 17dBm.

When module is transmitting data by air, RX light will flash

When module is receiving data by air, TX light will flash

5.4 Time delay diagram

5.4.1. Sleep mode

SRWF-1E86 support sleep function, controlled by pin SLP, controlled by pin SLP. Normally SLP pin is in high level, but when is in low level, the module will start to sleep. The module will not work until RST pin is in low level, means reset, or the module is powered again. Please refer to below sleep/reset timing diagram.

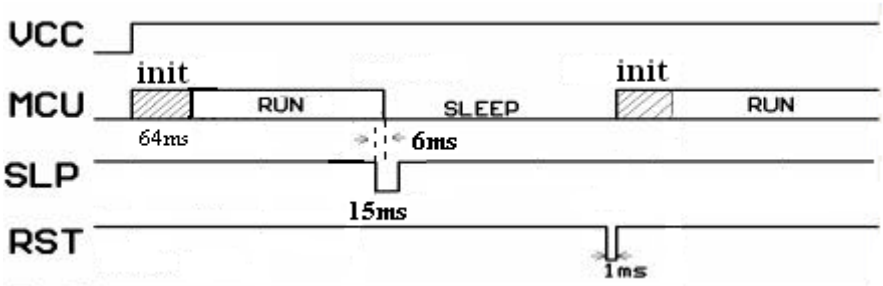

5.4.2. Transmitting delay

There is time delay (Td) between the data received by RXD of module A and the final data transmitted by TXD of module B. Different data rate results in different delay time. Please check the below time delay diagram.

Baud rate(bps)	Delay time(Td/ms)
1200	96
2400	48
4800	24.4
9600	12.2
14400	8.5

19200	6.3
38400	3.2
57600	3

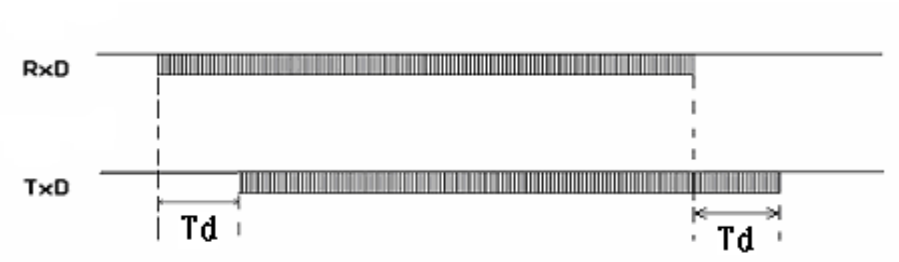

6. Receiving signal strength inspection

If you need inspect the receiving signal strength, then send READRSSI to serial port. Serial port will output the value of RSSI of last data frame. This value is absolute value. For example, reading of the byte is 45, then RSSI is -68dBm.

7. Available antenna

The below is the available antenna for SRWF-1E86: AT-1, AT-3, AT-4, AT-5 and so on. The working frequency of antenna supports 433, 470,868 and 915. You can visit Sunray's homepage to select more other antenna.

AT-1SMA antenna

AT-3Sparing antenna

AT-4 SMA antenna

AT-5 SMA antenna

8. Technical support and after-sales service

1. Sunray will provide free technical support for your application and secondary development. Sunray assures one-year warranty period and provides lifelong maintenance service.

2. For the convenient configuration to SRWF-1E86, Customers can request it from sales after you purchased the modules.

3. After the successful configuration by software, the hardware configuration won't work anymore. Module will only support software configuration.

Appendix one: Command list for parameter configuration

Parameter	Function	Command	Remark
hannel	Switch to hardware configuration to channel	HARDSETCHAN	Switch channel configuration from software to hardware
	Switch to hardware configuration to channel	SOFTSETCHAN	Switch channel configuration from software to hardware
	Set channel by software	SETCHAN=XX	Valid in status of software configuration; XX is the channel number to be set and its range is 00-31
Baud rate	Switch to hardware configuration to baud rate	HARDSETDATARATE	Switch baud rate configuration from software to hardware
	Switch to hardware configuration to baud rate	SOFTSETDATARATE	Switch baud rate configuration from software to hardware
	Set baud rate by software	DATARATE=XXX	Valid in status of software configuration ; XXX is baud rate to be set，012/024/048/096/144/192/384/576
Data format	Switch to hardware configuration to data format	HARDSETDATAFORMAT	Switch data format configuration from software to hardware
	Switch to hardware configuration to data format	SOFTSETDATAFORMAT	Switch data format configuration from software to hardware

	Set data format by software	DATAFORMAT =X	Valid in status of software configuration ;When X is 8, data format is 8bite; when 9, data format is 9 bite
Transmitting power	Set transmitting power	SETPOWER=XX	XX is power level and is configured to 1/02/05/08/11/14/17/20dBm
RSSI	Read RSSI value	READRSSI	Output the absolute value of RSSI; If output is 0x32, RSSI is -50dBm
Version	Read version information	GETEDITION	See the version remarks in 7.3

Appendix two: Layout dimension